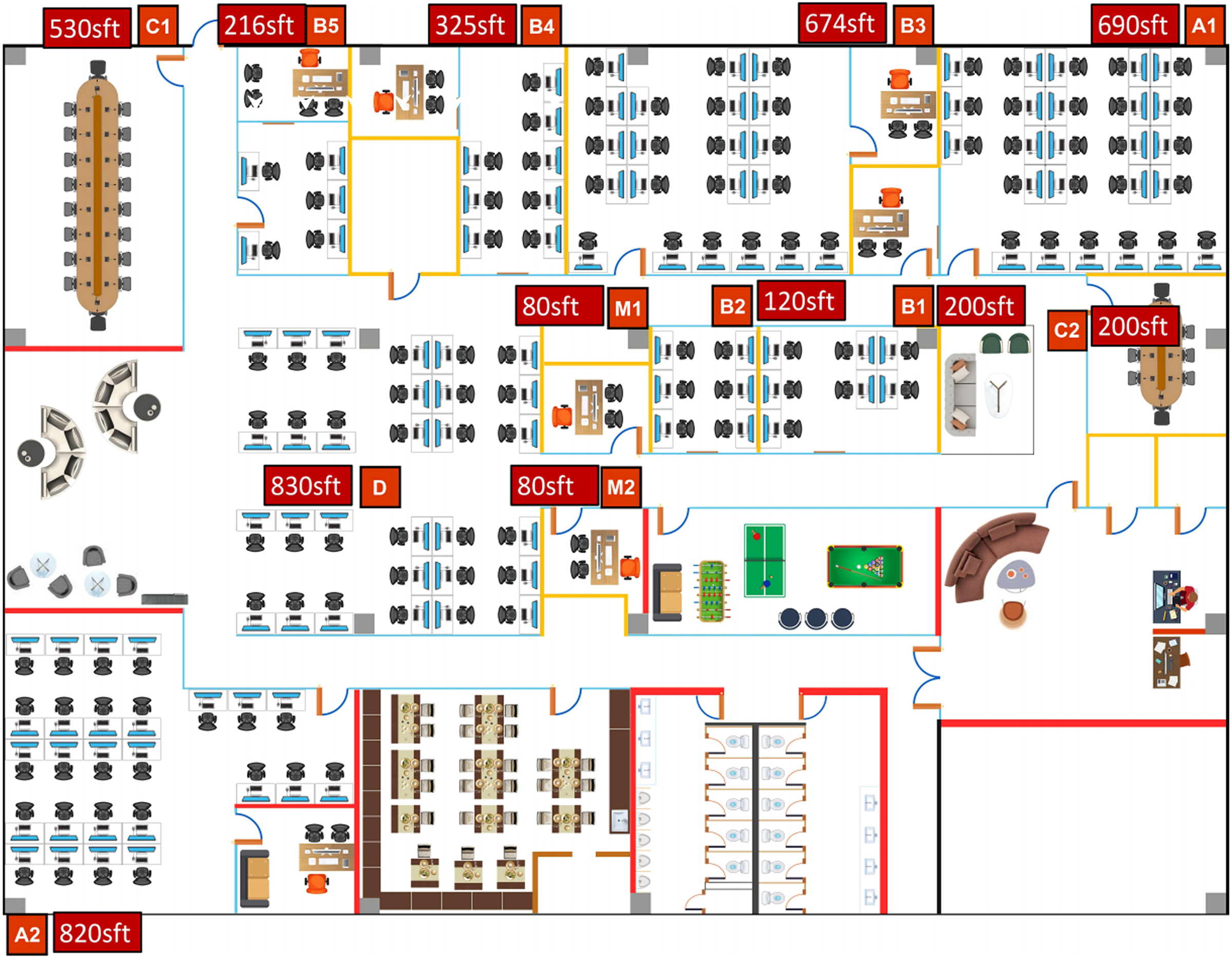
530sft
C1
216sft
B5
325sft
B4
674sft
B3
690sft
A1
80sft
M1
B2
120sft
B1
200sft
C2
200sft
830sft
D
80sft
M2
A2
820sft